3M™ Scotchpak™ 9723 Backing

Polyester Film Laminate

Description:

This laminate consists of pigmented polyethylene and polyester. The 3M proprietary lamination process does not use solvents or adhesives, minimizing potential for drug and/or excipient interactions. The product is supplied in roll form for use in the fabrication of transdermal, topical and transmucosal drug delivery systems.

- Tan
- Semi-translucent
- Occlusive
- Conformable
- Manufactured for use in pharmaceutical products

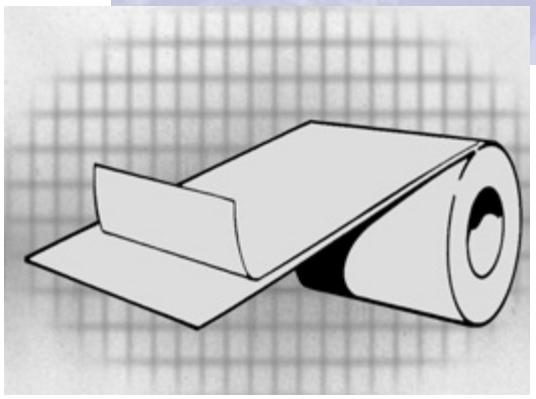

Film Properties:

Test data presented are average values and are not intended to be used for specification purposes.

Properties:	Nominal Values U.S.		Nominal Values Metric	
Caliper	1.7	mils	43.2	µm
Tensile				
MD	12	lbs./in.	53.4	N/25.4 mm
CD	15	lbs./in.	66.7	N/25.4 mm
Elongation				
MD	70	%	70	%
CD	50	%	50	%
MVTR				
($g/m^2/24$ hr)	10		10	
Oxygen Transmission				
($cc/m^2/24$ hr)	100		100	

Note: 3M test methods and product specifications available upon request.

Backings

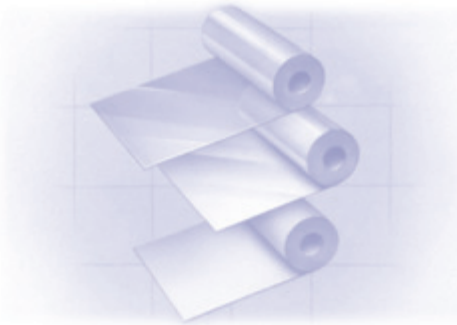

3M Drug Delivery Systems

3M™ Scotchpak™ 9723 Polyester Film Laminate

General Information:

	Nominal Values U.S.	Nominal Values Metric
Length:		
Maximum	1500 yds. on 3 in. I.D. cores	1372 m on 76 mm I.D. cores
Approximate roll diameters	1500 yds. – 11.5 in. 1000 yds. – 9.5 in. 500 yds. – 7.0 in.	1372 m – 30 cm 914 m – 24 cm 457 m – 18 cm
Width:		
Maximum	52 in.	132 cm
Sample Roll:	25 yds. × 6 in.	23 m × 15 cm
Minimum Order Quantity:	104 yd^2	87 m^2

Traceability:

Each roll and shipment will contain a lot number which is traceable through production records to input materials and process conditions. Material traceability will be in compliance with United States current Good Manufacturing Practices.

Product Safety:

Product safety is characterized by the following evaluations:

In vitro Cytotoxicity
Primary Skin Irritation
USP Plastics Class V Extraction
- Acute Systemic Toxicity
- Intracutaneous Irritation

Storage Conditions:

The product should be stored at temperatures between 32–86°F (0–30°C) and relative humidity less than 75 percent. The product will maintain the stated performance, for a period of two years from the manufactured date, when stored under recommended conditions.

Product Use:

Customer is solely responsible for determining the suitability of Transdermal Components for the intended use and performing any necessary safety testing.

For More Information, Please Call:

U.S.A. (800) 643-8086
Europe 44 (1509) 613070
Japan (03) 3709-9671
www.3M.com/DDS

See 3M General Conditions of Sale for Transdermal Components for warranty information and other terms of sale.

3M

Drug Delivery Systems
3M Center, Building 275-3E-10
St. Paul, MN 55144-1000
U.S.A.
(800) 643-8086
FAX (651) 633-2072

3M Health Care Ltd.
Drug Delivery Systems
Morley Street
Loughborough
Leicestershire, LE11 1EP
England
44 (1509) 613070
FAX 44 (1509) 613099

3M Drug Delivery Systems
Japan
スリーエム ヘルスケア株式会社
薬事部
本社：158-8583東京都世田谷区玉川台2-33-1
(03) 3709-9671
FAX (03) 3709-8754

Scotchpak is a trademark of 3M.
Copyright © 3M 10/04.
All rights reserved.
70-2008-9187-0